

COASTER

3-Shelf Glass Curio Cabinet

Black Top & Base

Magnetic Door

Tempered Glass

Ample Storage





Versatile Display

Perfect for showcasing treasured items and artwork, this curio cabinet is an ideal display case for a more compact space.

Tempered Glass

Two clear tempered glass shelves provide strength to support your items with a magnetic tempered glass door for easy, safe access.







Convenient Storage

Linear styling with a modern look, three tiers of shelving add plenty of options for a personalized touch to any room.



Black Finish

Simple design with a slender black frame blends with any decor and is available in a variety of sizes.



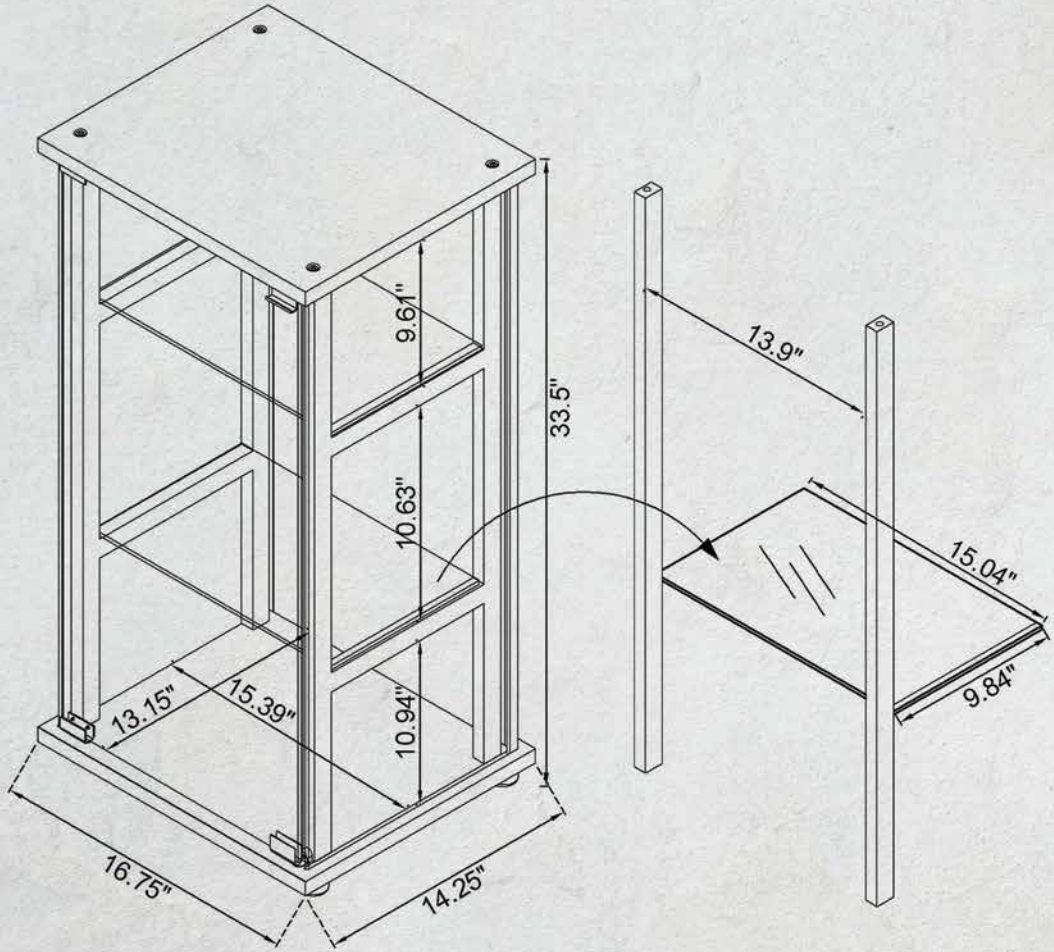

Update your home office with contemporary glamour

COASTER